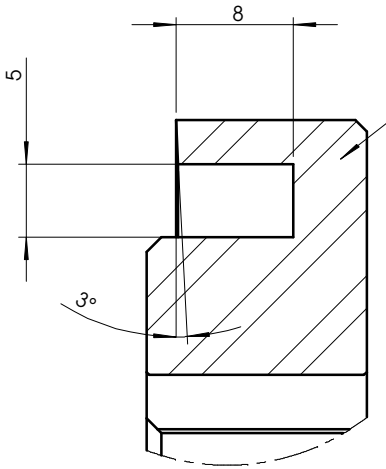

DETAIL Y
SCALE 2 : 1

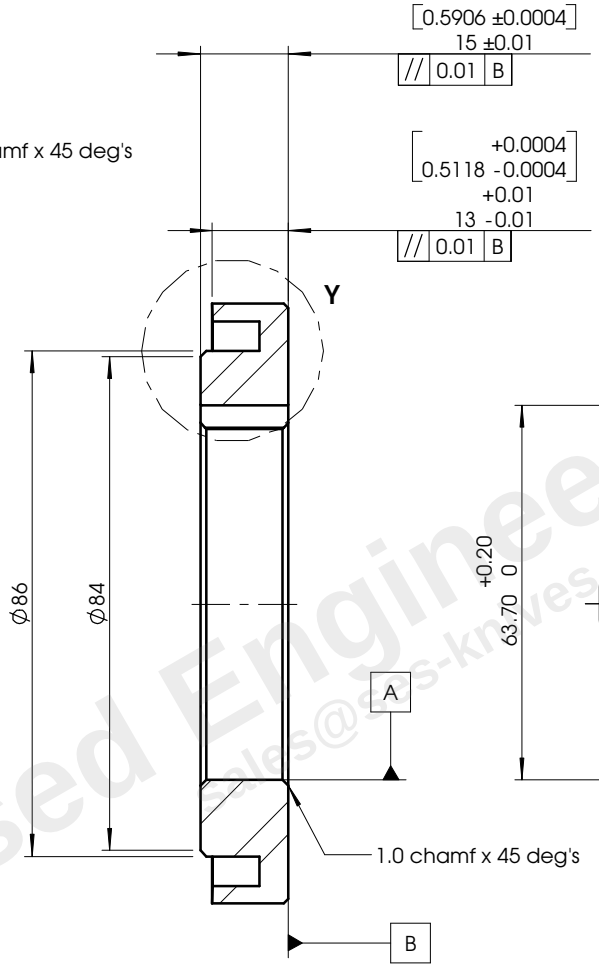

SECTION X-X
SCALE 1 : 1.25

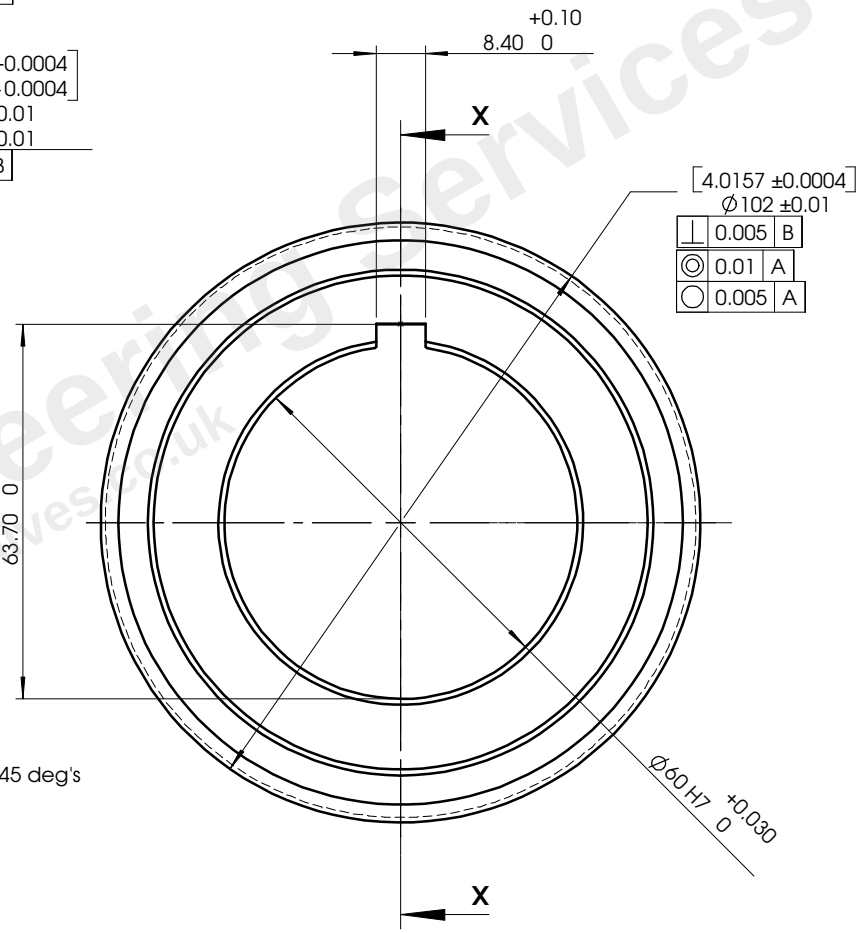

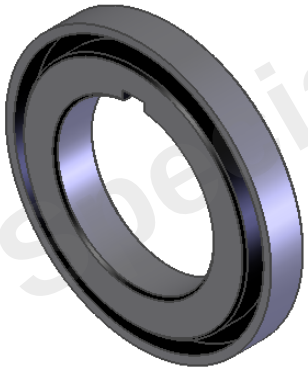

Specialised Engineering Services
sales@ses-knives.co.uk

UNLESS OTHERWISE SPECIFIED:		NAME	DATE	Specialised Engineering Services	
DIMENSIONS ARE IN MM	DRAWN	J.R.Eades	26/06/07		
TOLERANCES AS SHOWN	CHECKED			102 x 60 x 15 mm Bottom cutters	
1ST ANGLE PROJECTION	ENG APPR.				
	MFG APPR.				
	Q.A.				
MATERIAL O1	PROPRIETARY AND CONFIDENTIAL			SIZE A	DWG. NO. SES -1000 - 170 / REV
HARDNESS 60 / 62 HRC	THE INFORMATION CONTAINED IN THIS DRAWING IS THE SOLE PROPERTY OF SPECIALISED ENGINEERING SERVICES. ANY REPRODUCTION IN PART OR AS A WHOLE WITHOUT THE WRITTEN PERMISSION OF SPECIALISED ENGINEERING SERVICES IS PROHIBITED.			SCALE: 1:1.25	WEIGHT IN GRAMS: 460 / SHEET 1 OF 1
DO NOT SCALE DRAWING					

REV.	DATE	DETAIL	COMMENTS

5 4 3 2 1